TABLE OF CONTENTS

0.1 Circulation List

0.2 Amendment Record

FOREWORD

1. **SCOPE**
2. **REFERENCES**
3. **TERMS AND DEFINITIONS**
4. **REQUIREMENTS**
5. **TESTS AND INSPECTION**
6. **MARKING, LABELLING AND PACKING**
7. **TECHNICAL DOCUMENTATION**

ANNEX A: **Guaranteed Technical Particulars** *(to be filled and signed by the Manufacturer and submitted together with relevant copies of the Manufacturer's catalogues, brochures, drawings, technical data, sales records, customer reference letters, details of manufacturing capacity, the manufacturer's experience and copies of type test certificates, type test reports and accreditation certificate to ISO/IEC 17025 for the testing laboratory for tender evaluation, all in English Language)*

0.1 Circulation List

COPY NO.	COPY HOLDER
1	Research & Development Manager
2	Procurement Manager
Electronic copy (pdf) on KPLC Server (currently: Network→stima-fprnt-001→techstd&specs)	

0.2 Amendment Record

Rev No.	Date (YYYY-MM-DD)	Description of Change	Prepared by (Name & Signature)	Approved by (Name & Signature)
Issue 1 Rev 1	2013-11-14	-Changed Document Number prefix from KPLC1 to KP1 and inserted new logo -Included Low Voltage Stay Insulators	S. Kimitei	G. Owuor

FOREWORD

This specification has been prepared by the Research and Development Department of The Kenya Power & Lighting Company Limited (abbreviated as KPLC) and it lays down requirements for Porcelain Stay Insulators (upto 33kV). The specification is intended for use by KPLC in purchasing the insulators.

The supplier shall submit information which demonstrates satisfactory service experience with products which fall within the scope of this specification.

1. SCOPE

This specification is for porcelain stay insulators for use on overhead power distribution lines operating at a nominal voltage of up to 33kV 50Hz.

The specification also covers inspection and test of the insulators as well as schedule of Guaranteed Technical Particulars to be filled, signed by the manufacturer and submitted for tender evaluation.

The specification stipulates the minimum requirements for porcelain stay insulators acceptable for use in the company and it shall be the responsibility of the Supplier to ensure adequacy of the design, adherence to applicable standards and the specification, good workmanship and good engineering practice in the manufacture of the insulators for The Kenya Power & Lighting Company Limited.

The specification does not purport to include all the necessary provisions of a contract.

2. REFERENCES

The following standards contain provisions which, through reference in this text constitute provisions of this specification. Unless otherwise stated, the latest editions (including amendments) apply.

IEC 60383: Tests on insulators of ceramic material or glass for overhead lines with a nominal voltage greater than 1000V.

IEC 60060-1: High-voltage test techniques. Part 1: General definitions and test requirements.

BS 137: Insulators of ceramic material or glass for overhead lines with a nominal voltage greater than 1000V.

BS 183: Specification for general purpose galvanized steel wire strand.

3. TERMS AND DEFINITIONS

The terms and definitions given in the reference standards shall apply.

4. REQUIREMENTS

4.1 Service Conditions

The insulators shall be suitable for continuous use outdoors in tropical areas at altitudes of up to 2200m above sea level, humidity of up to 90%, average ambient temperature of +30°C with a minimum of -1°C and a maximum of +40°C, in direct sunlight, heavy saline conditions along the coast and isokeraunic levels of up to 180 thunderstorm days per year.

4.2. DESIGN, MATERIALS AND CONSTRUCTION

4.2.1 The insulator shall be designed for insulation of stays to reduce risk of dangerous potential gradients at ground level and, in the case of stays on earthed structures, to prevent electrolytic corrosion of stay rods.

4.2.2 The insulating material shall be porcelain.

The porcelain shall be sound, thoroughly vitrified and free from defects and blemishes which might adversely affect the life of the insulator. The exposed parts of the porcelain shall be smoothly glazed and shall be brown in colour.

4.2.3 The insulator shall be free from stresses due to expansion and contraction in any part which may lead to deterioration.

4.2.4 The holes in the insulator shall be smoothly radiused with as large a radius as practicable to present an even bearing surface to the stay strand loop.

4.3 PARTICULAR REQUIREMENTS

4.3.1 Particular Requirements for 11kV Stay Insulators

The insulator shall be strain type suitable for stay wire size 7/4.00mm Grade 700 (7/8 SWG), stay wire to BS 183.
The minimum failing load of the insulator shall be: 110kN
The minimum power frequency wet flashover voltage shall be: 20kV, r.m.s.
The minimum impulse withstand voltage shall be: 60kV peak, positive.
The insulator shall be to the general arrangement drawing shown in Drg. no. tsp/04/016/01.

4.3.2. Particular Requirements for 33kV Stay Insulators

The insulator shall be strain type suitable for stay wire size 19/3.55mm Grade 700 (19/10 SWG), stay wire to BS 183.
The minimum failing load of the insulator shall be: 110kN
The minimum power frequency wet flashover voltage shall be: 48kV, r.m.s.
The minimum impulse withstand voltage shall be: 100kV peak, positive.
The insulator shall be to the general arrangement drawing shown in DRG. NO. TSP/04/016/02.

4.3.3. Particular Requirements for Low Voltage Stay Insulators

The insulator shall be strain type suitable for stay wire size 4/4.00mm Grade 700 (4/8 SWG), stay wire to BS 183.
The minimum failing load shall be: 80kN
The power frequency flashover voltage, wet shall be: 18kV, r.m.s.
The power frequency flashover voltage, dry shall be: 35kV, r.m.s
The insulator shall be to the general arrangement drawing shown in DRG. NO. TSP/04/016/03

5. TESTS AND INSPECTION

5.1 Type tests, routine tests and sample tests shall be done following procedures specified in IEC 60383, IEC 60060-1, BS 137 and the requirements of this specification. It shall be the responsibility of the manufacturer to perform or to have performed the tests specified.

5.2 Copies of previous Type Test Certificates and Type Test Reports by a third party testing laboratory accredited to ISO/IEC 17025 shall be submitted with the offer for evaluation. A copy of the accreditation certificate for the testing laboratory shall also be submitted with the tender (all in English Language).

Type test reports to be submitted shall include the following:

- dry lightning impulse withstand voltage test,
- power-frequency flashover voltage test (wet),
- verification of dimensions,

- porosity test and
- test for mechanical strength (failing load test).

Type Test Reports for stay insulator of similar or higher voltage rating and similar or higher mechanical failing load shall be accepted as representative for any of the stay insulators on tender.

5.3 A sample of each type of stay insulator offered shall be submitted with the bid documents for evaluation.

5.4 The insulators shall be subject to acceptance tests at the manufactures' works before dispatch. Acceptance tests shall be witnessed by two Engineers appointed by The Kenya Power and Lighting Company Limited (KPLC).

Factory Acceptance Tests shall include impulse withstand voltage test, wet power-frequency withstand voltage test, verification of dimensions, porosity test and test for mechanical strength

5.5 On receipt of the insulators KPLC will inspect them and may perform or have performed any of the relevant tests in order to verify compliance with the specification. The supplier shall replace without charge to KPLC, insulators which upon examination, test or use fail to meet any or all of the requirements in the specification.

6. MARKING, LABELLING AND PACKING

6.1 The following information shall be clearly and indelibly marked on each insulator:

a) Name or trade mark of the manufacturer
b) Mechanical failing load
c) The letters KPLC followed by the purchase order number

The marking may be printed or impressed provided such impressions do not impair the performance of the insulator.

6.2 The insulators shall be packed in wood crates which are reinforced and held closed by external steel wire bindings. Each crate shall be internally braced to permit stacking and the steel wire bindings shall be designed to keep the crate firmly closed and permit easy and rapid opening at time of installation.

The crates shall then be stacked on sturdy wood pallet. The assembly shall be held tightly in place with steel bands and protected against moisture by a complete covering of heat-shrinkable polyethylene film.

7. TECHNICAL DOCUMENTATION

7.1 The bidder shall submit its tender complete with technical documents required by Annex A (Guaranteed Technical Particulars) for tender evaluation.

7.2 The successful bidder (supplier) shall submit the following documents/details to The ' Kenya Power & Lighting Company for approval before manufacture:

a) Guaranteed Technical Particulars of the stay insulator to be manufactured,
b) Design drawings and construction details of the stay insulator,
c) Quality assurance plan (QAP) that will be used to ensure that the insulator design, material, workmanship, tests, service capability, maintenance and documentation will fulfil the requirements stated in the contract documents, standards, specifications and regulations. The QAP shall be based on and include relevant parts to fulfil the requirements of ISO 9001:2008
d) Test Program to be used after manufacture,
e) Marking details and method to be used in marking the insulators,
f) Manufacturer's undertaking to ensure adequacy of the design, good workmanship, good engineering practice and adherence to applicable standards in the manufacture of the stay insulators for KPLC,
g) Packaging details (including packaging materials).

--------- THIS SPACE LEFT BLANK ---------

ANNEX A: Guaranteed Technical Particulars *(to be filled and signed by the Manufacturer and submitted together with relevant copies of the Manufacturer's catalogues, brochures, drawings, technical data, sales records, customer reference letters, details of manufacturing capacity, the manufacturer's experience and copies of type test certificates, type test reports and accreditation certificate to ISO/IEC 17025 for the testing laboratory for tender evaluation, all in English Language)*

TENDER NO..... .....
BIDDER'S NAME & ADDRESS .....

No.	Requirements		BIDDER'S OFFER
1.	Name of the manufacturer and country of manufacture		
2.	Applicable standards		
3.	Service conditions		
4.	Voltage Rating		
5.	Type of insulator (strain type required)		
6.	Size of stay wire to be used		
7.	Minimum mechanical failing load of the insulator		
8.	Minimum power frequency flashover voltage, wet		
9.	Minimum impulse withstand voltage, positive		
10.	Drawing submitted (indicate drawing number)		
11.	Materials, colour and finish		
12.	Manufacturer's Guarantee and Warranty		
13.	List catalogues, brochures, technical data and drawings submitted to support the offer.		
14.	List customer sales records submitted to support the offer.		
15.	List Type Test Certificates and their Test Reports submitted with tender (indicate test report numbers, date, Testing Institution and contact addresses) • Dielectric tests (Lightning Impulse and		

	Power Frequency Withstand Tests). • Mechanical Failing Load. • Verification of Dimensions. • Porosity Test.		
16.	List Acceptance Tests to be witnessed by KPLC Engineers at the factory.		
17.	Copy of ISO 9001:2008 Certificate submitted (indicate validity)		
18.	Quality Assurance Program/Plan		
19.	Statement of compliance to tender specifications		
20.	Comments on tender specifications		
21.	Deviations from tender specifications and supporting data, test reports, technical documents etc.		
22.	Inspection of the insulators at KPLC stores/site.		
23.	Marking	Name or trade mark of the manufacturer	
		Mechanical failing load & Unit	
		The letters KPLC	
		Purchase order number	
	Packaging		

.....

Manufacturer's Name, Signature, Stamp and Date

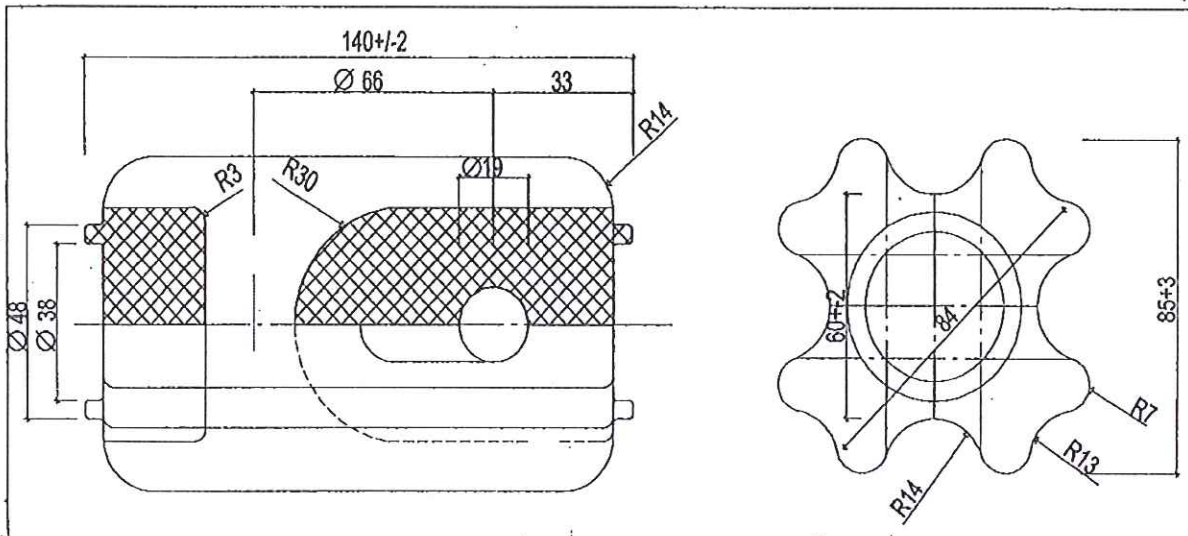

Technical specification

1.part shows without glaze,the other parts are all in brown glage.

2.Mechanical failing load:110KN

3.power frequency wet flashover voltage:20KV

4.Impulse withstand voltage:60Kv

5.standard:BS137

6.Transition:All transition between surface must be smooth to provide even bearing for stay wire.

	DATE	NAME	SIGN
APPROVED			
CHECKED ENGINEER IC			
CHECKED FIRST PLANT			
DRAWN			
TRACED			

REF	REVISION	DATE	SIGN	CHECKED	DATE
1					
2					
3					
4					
5					

11KV porcelain insulator stay

K. P. & L. Co. Ltd

Drg. no.tsp/04/016/01

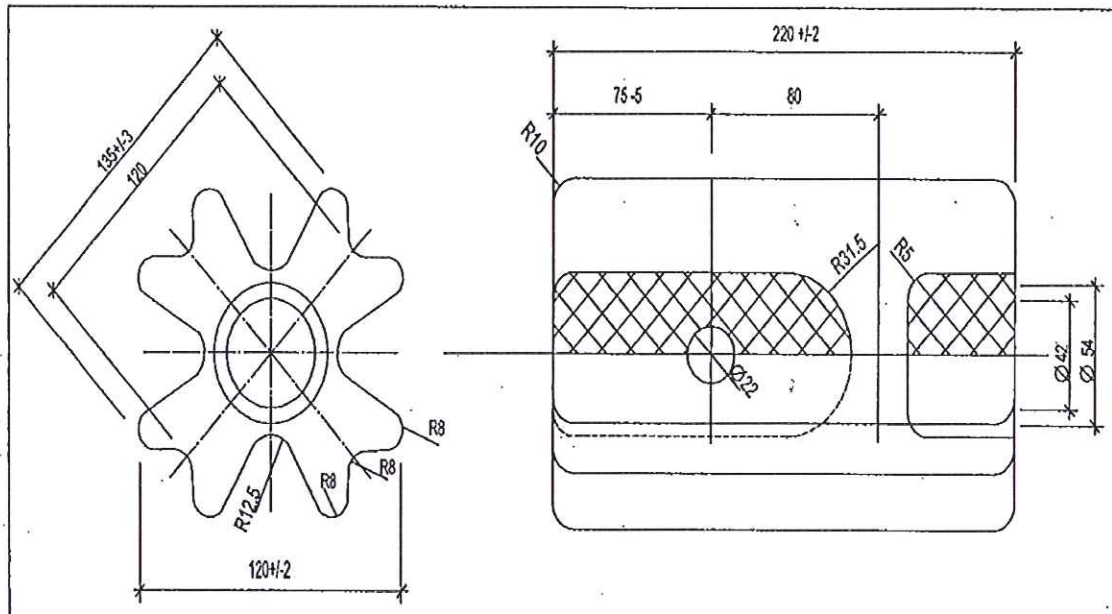

TECHNICAL SPECIFICATION

1.part shows without glaze,the other parts are all in brown glaze.

2.Mechanical falling load:110KN

3.Power frequency wet flashover voltage:48KV

4.Impulse withstand voltage:100KV

5.Standard:BS137

6.Transitions:All transition between surface must be smooth to provide even bearing for stay wire.

	DATE	NAME	SIGN
APPROVED			
CHECKED ENGINEER			
CHECKED PRINCIPAL ENGINEER			
DRAWN			
TRACED			

REF	REVISION	DATE	SIGN	CHECKED	DATE
1					
2					
3					
4					
5					

33kv porcelain insulator stay

K. P. & L. Co. Ltd

DRG NO:TSP/04/016/02

Issued by: Head of Section, Tech Stds & Specs	Authorized by: Head of Department , R & D
Signed:	Signed:
Date: 2013-11-14	Date: 2013-11-14

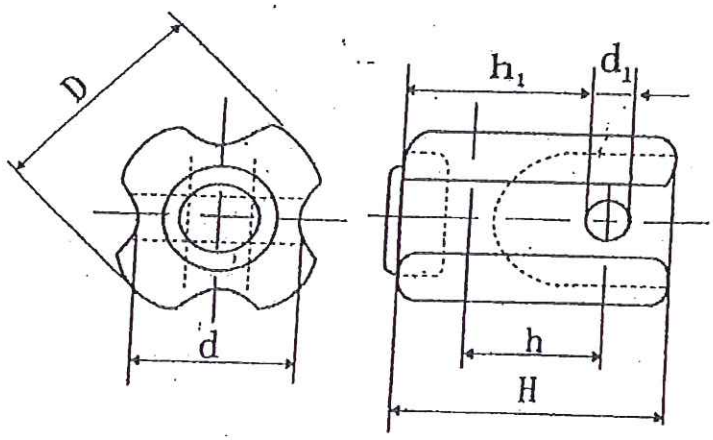

DIMENSIONS (mm)	REQUIREMENT, nominal
H	103
h	49
h_1	62
D	82
d	49
d_1	22

DRG. NO. TSP/04/016/03: Low Voltage Stay Insulator